SimpleFix Seismic Restraint Kit

BRANZ Appraisal No. 761 (2023)

The SimpleFix Seismic Restraint Kit has been approved by a registered engineer for water heaters up to 700 litres in accordance with the seismic design code NZS 1170.5:2004. Recent updates to G12 Water Supplies Acceptable Standards indicate:

- An additional centre strap is required where a storage water heater is located more than 12m off the ground.
- Additional timber framing may be required in retrofit situations to ensure adequate strap fixing is available.
- Straps shall not be installed where they clash with the water heater inlet, outlet or controls.
- Where the 100mm maximum strap clearance from the top or bottom of the storage water heater cannot be achieved, straps may be placed within the top and bottom 25% and one or two additional straps may be required. 1 additional strap placed centrally for cylinders up to 200L & 2 additional straps evenly spaced for cylinders 200-360L.
- A maximum total of four straps are required when complying with both Note 1 and Note 4.

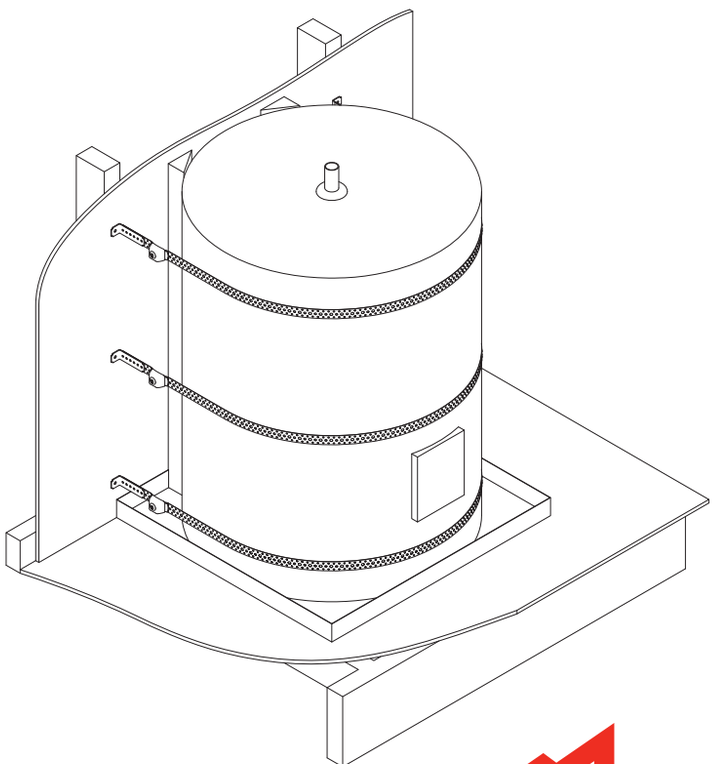

BRANZ Appraised
Appraisal No. 761

FOR CYLINDERS UP TO	
200L Capacity	Up to 3 x Straps
200L to 360L Capacity	Up to 4 x Straps
360L to 500L Capacity	4x Straps
500L x 600L Capacity	5x Straps
600L to 700L Capacity	6x Straps

RSL CODE	
SIMKIT	2 Strap Kit - Galvanised
SIMKIT/3	3 Strap Kit - Galvanised
SIMKIT/ST	2 Strap - Stainless 304
SIMKIT/ST3	3 Strap - Stainless 304
SIMKIT/PC3	3 Strap - G550 Powder Coated White

* To comply as an acceptable solution use only brackets and components supplied as part of the restraint kit.

* For use in outdoors or high environmental conditions the stainless restraint kit is recommended.

* SimpleFix Galvanised Restraint Kits contain G550 0.75mm High Tensile Strap allowing for full compliance with the NZBC.

SIMKIT INSTALLATION INSTRUCTIONS

BRANZ Appraised
Appraisal No. 761

STEP 1:
Locate vertical stud or horizontal nog **A**

STEP 2:
Fasten EQ Bracket to Nog or Stud with TEK screw **B**

C

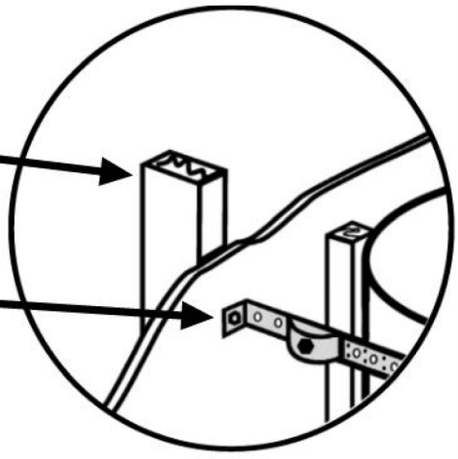

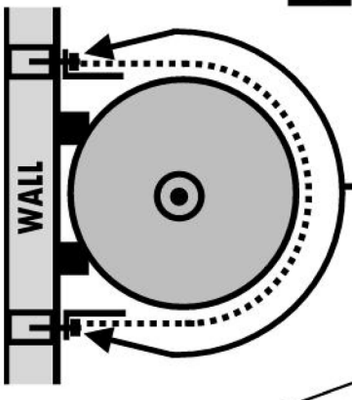

STEP 3:
Measure the distance around the Cylinder from wall to wall near the base of both EQ brackets

STEP 4:
Remove tape
Cut off the angled tab
Thread the SimpleFix Strap back through the nylon tie until the required length is obtained then cut

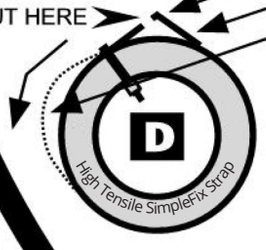

WARNING: DO NOT CUT NYLON TIE

STEP 5:
Fit both ends of the SimpleFix strap onto the EQ brackets with 2 x M5 bolts and nuts

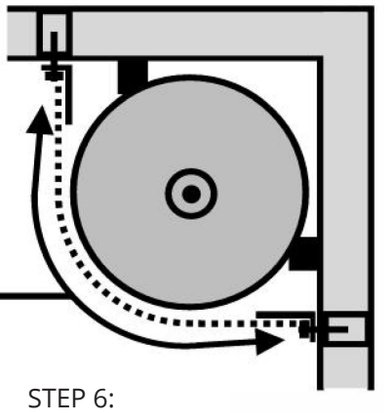

STEP 6:
Fit Tensioning device **F** to the SimpleFix Strap as shown below.
Do up until firm

